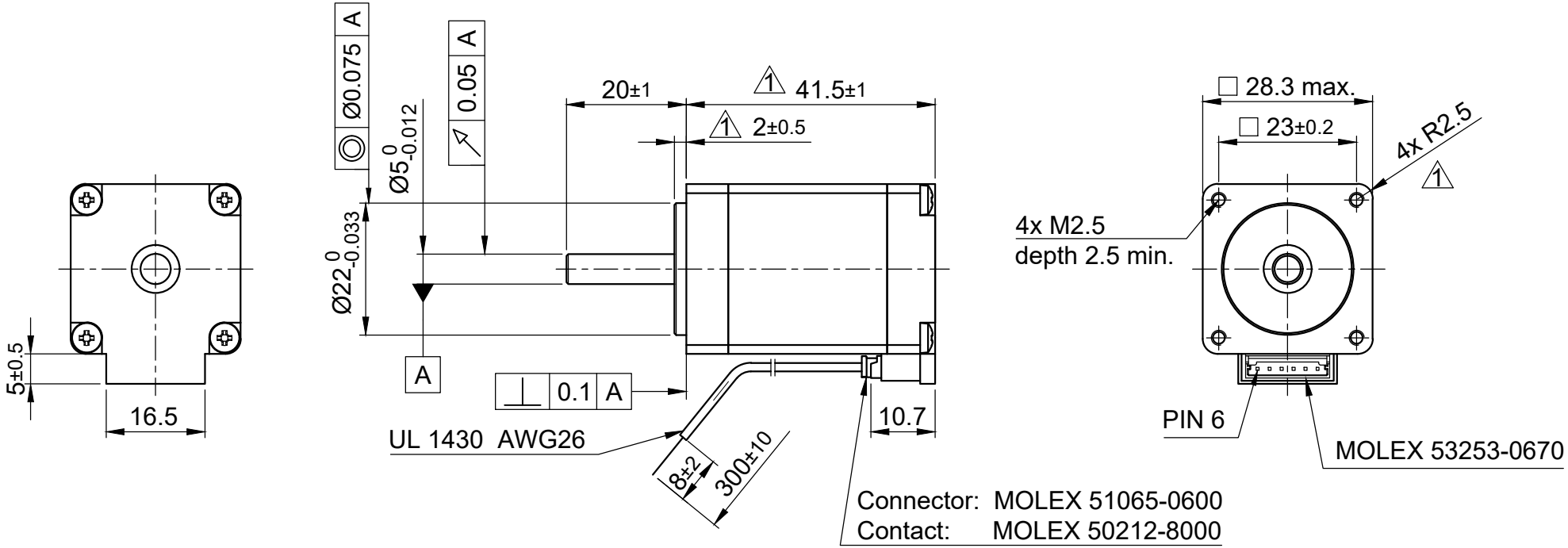

MOTOR SPECIFICATION		
Voltage	V DC	2.2
Current per Winding	A	1.5
Resistance per Phase (25°C) ±15%	Ω	1.45
Inductance per Phase (1 kHz) ±20%	mH	1.25
Holding Torque	Nm	0.135
Step Angle ±5%	°	1.8
Rotor Inertia	kg m²	1.2 x10^{-6}

TYPE OF CONNECTION			
Bipolar	Pin No.	Wire Col.	Winding
A	1	BK	
A\	3	GN	
B	4	RD	
B\	6	BU	

A-Shaft | Preload Spring | B-Shaft

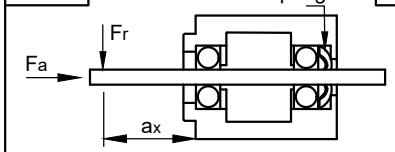

Max. Axial Force	Fa	N	7.0
Max. Radial Force	Fr (a1 = 5 mm)	N	28 max.
Axial Play	Fa = 4.0 N	mm	0.08
Radial Play	Fr = 4.0 N	mm	0.02

GENERAL MOTOR SPECIFICATION		
Ambient Temperature	°C	-20 ...50
Max. Temperature Rise (at standstill - 2 phases energized)	°C	80
Max. Ambient Humidity (non condensing)	%	85
Insulation Class		B
Insulation Resistance	MΩ	100
Dielectric Strength (for 1 min - coil to case)	V AC	500

ISO 8015	ISO 1302	ISO 2768 cK	ISO 13715

					Date	Name
				Drawn	23.02.2023	Schneid_A
				Reviewed	23.02.2023	Reith_S
				Released	23.02.2023	Reith_S
01	adjust dimension	Schneid_A	23.02.2023			
REV	Rev. Text	Name	Date			

Nanotec® PLUG & DRIVE

Weight: ~0.14 kg

SC2818M1504-A

20001897

A4 Page 1

State: Released | Rev: 01 | CONFIDENTIAL