GPLL

Economy Planetary Gears

CAUTION

Please note that the GPLL gears are only available together with a motor.

TECHNICAL DATA

	GPLL22	GPLL40	GPLL52
Combination with motor	ST20/28, DB28	ST40/41/42, DB42	ST57/58/59/60 DB57/87
Axial/radial shaft load (N)	7/10	30/50	100/200
Service life	Lh10 > 1000 hours	Lh10 > 1000 hours	Lh10 > 1000 hours
Working temperature	-10°C bis +80°C	-10°C bis +80°C	-10°C bis +80°C
Input speed max.	9000 rpm	9000 rpm	9000 rpm

*The estimated service life is an approximate value based on the listed rated torques and an ambient temperature of 30 °C. There are no data available for differing conditions as the environmental factors and operating conditions may vary greatly.

VERSIONS

Type	Reduction Ratio	Output Torque Nominal Nm	Output Torque Max. Value Nm	Efficiency %	Backlash ´ (arc minutes)	Length „L“ mm	Weight kg
GPLL22-5	4.66	0.2	0.6	80	<150	21.8	0.046
GPLL22-25	25.2	0.3	0.9	70	<150	28	0.051
GPLL22-90	89.72	0.4	1.2	60	<150	34.2	0.058
GPLL40-4	4	0.5	1.5	80	<180	27.5	0.191
GPLL40-14	14	1	3	70	<180	34.2	0.193
GPLL40-24	24	1	3	70	<180	34.2	0.193
GPLL40-49	49	1.8	5.4	60	<180	40.9	0.233
GPLL52-4	4.33	1.5	4.5	80	<180	53	0.475
GPLL52-15	15.16	5	15	70	<180	68.5	0.66
GPLL52-53	53.08	10	30	60	<180	84	0.85
GPLL52-100	100.28	10	30	60	<180	84	0.85

GPLL
Economy Planetary Gears

DIMENSIONS (IN MM)

GPLL22

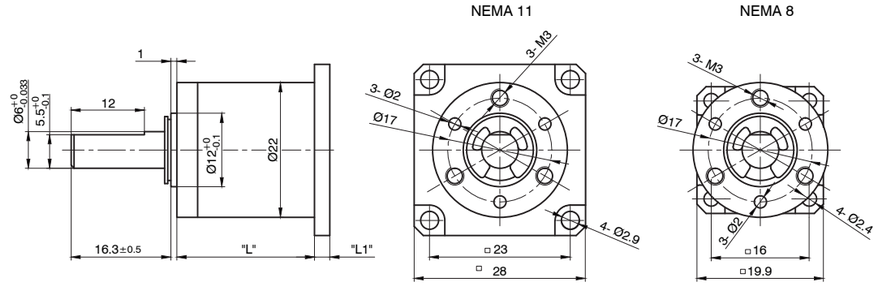

GPLL40

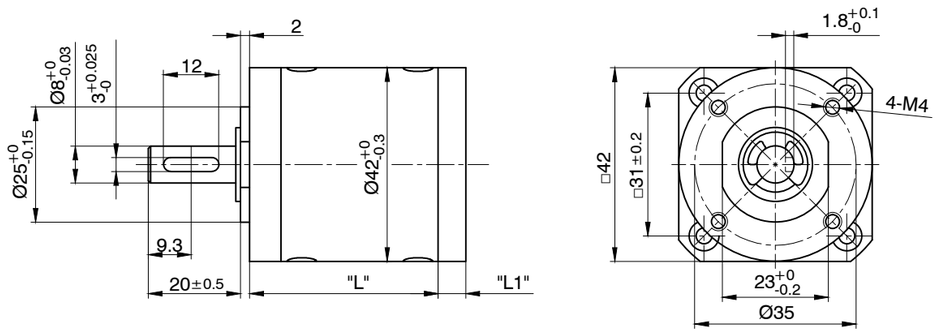

GPLL52

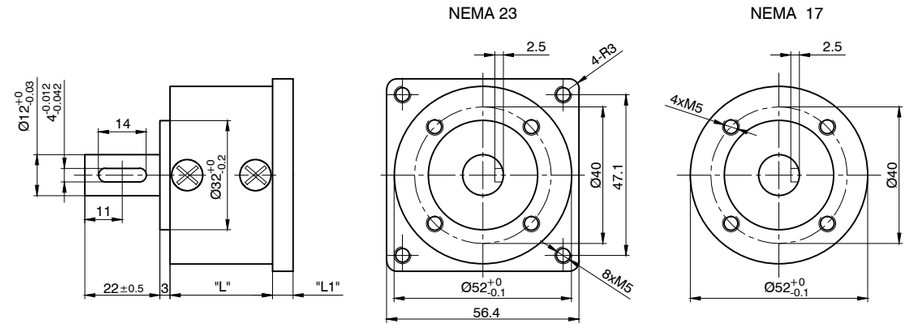

OPTIONS